UniFi® Protect G4 Pro

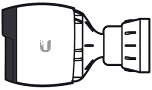
a

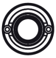
b

c

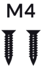

d

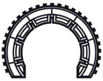
e

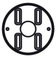
f

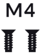

g

1

A

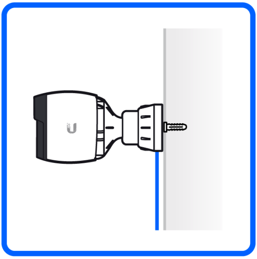

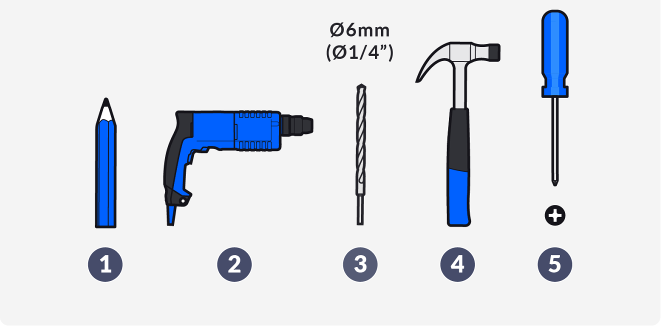
Ø6mm
(Ø1/4")
1
2
3
4
5

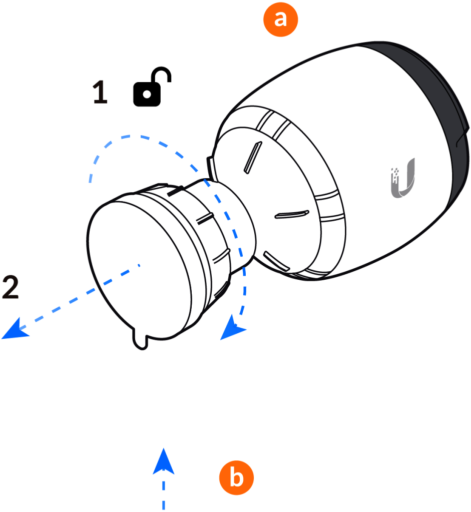

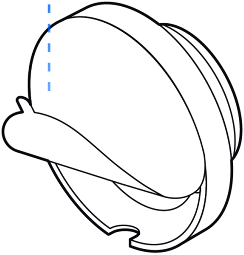

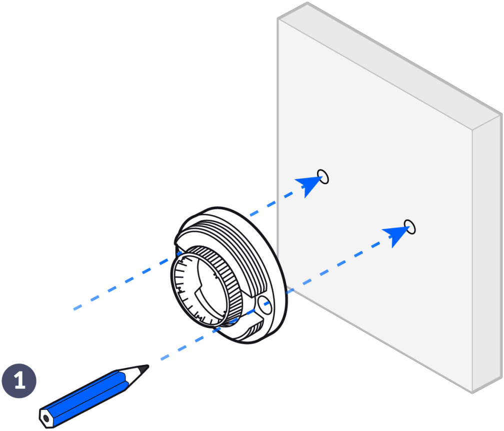

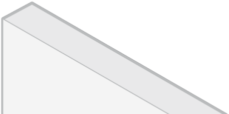

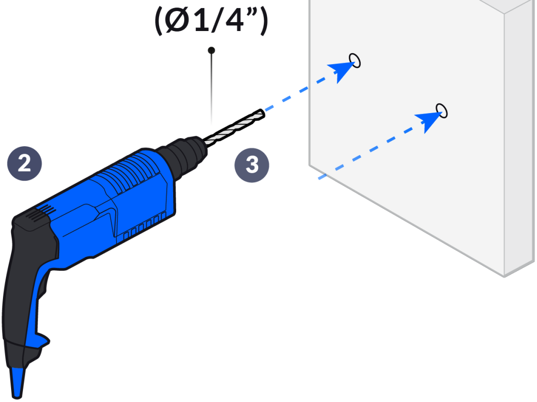

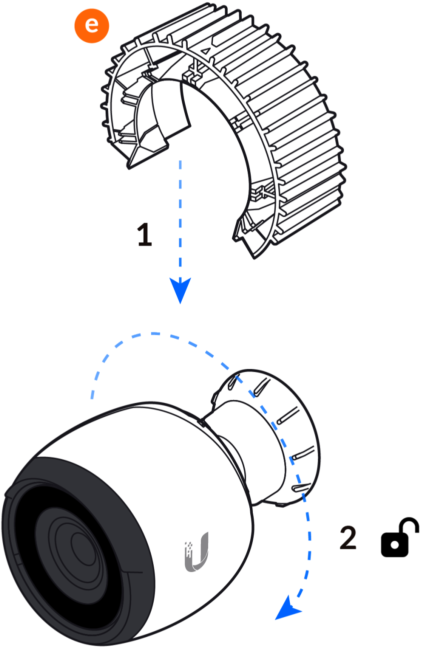

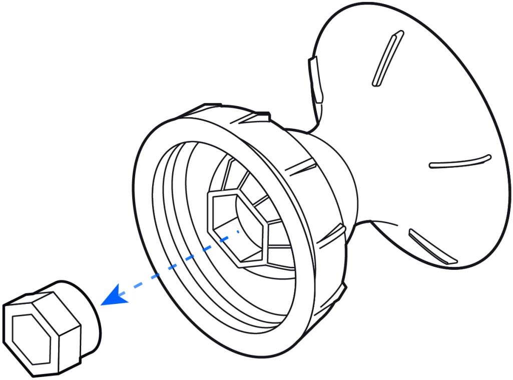

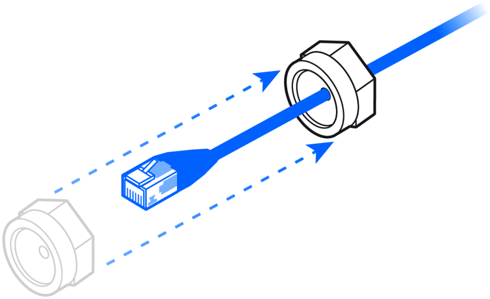

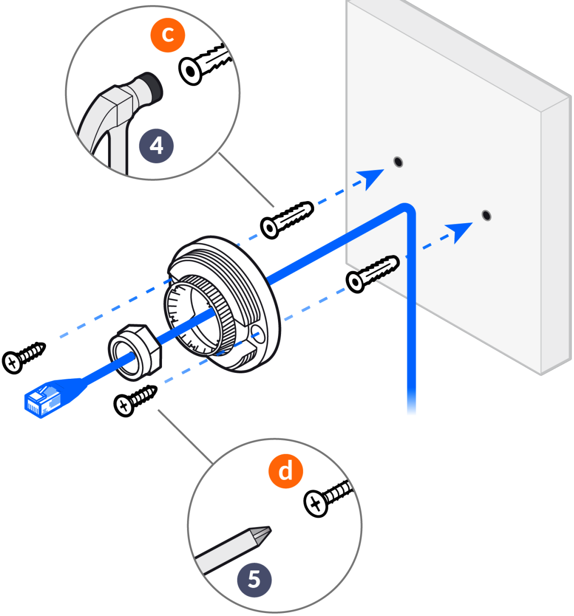

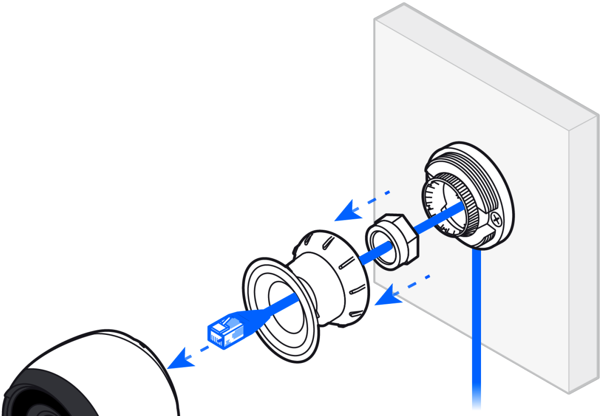

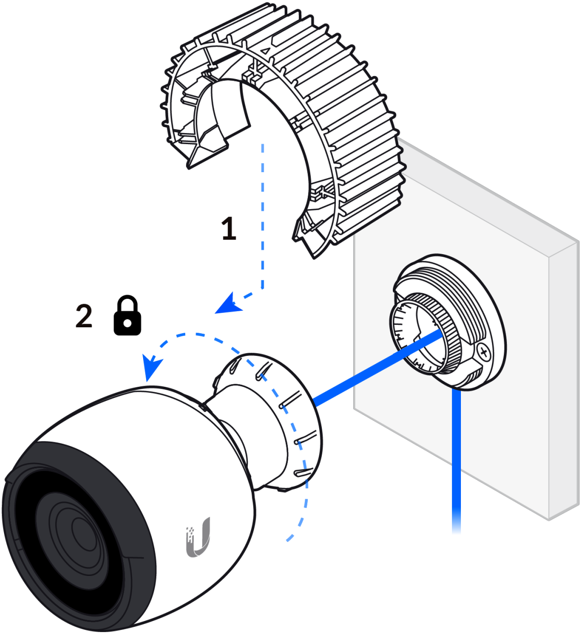

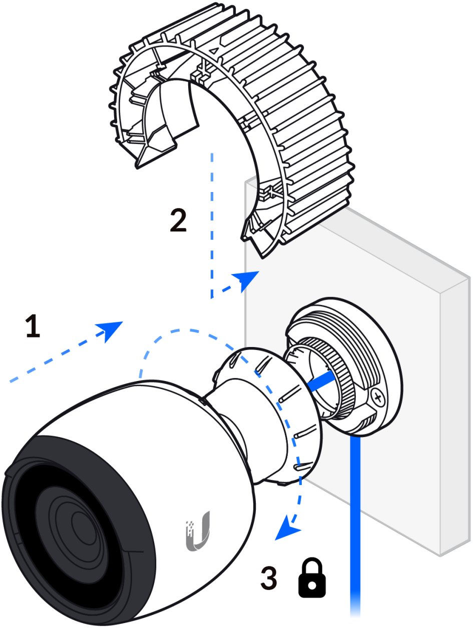

B

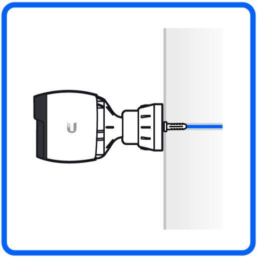

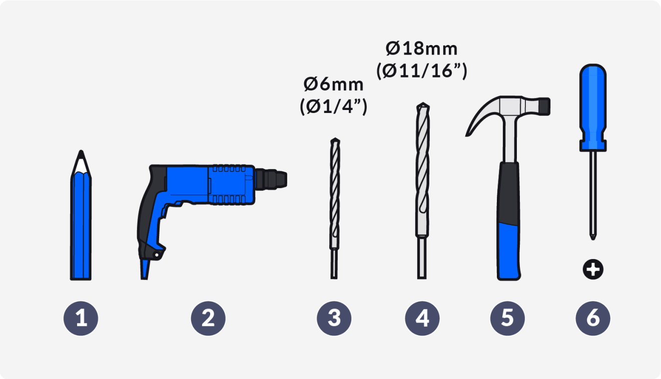
Ø6mm
(Ø1/4")
Ø18mm
(Ø11/16")
1
2
3
4
5
6

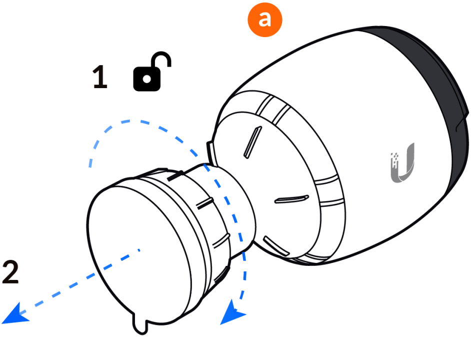

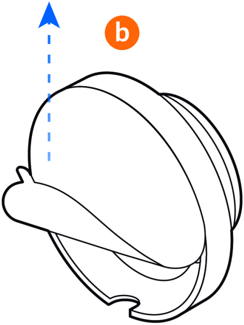

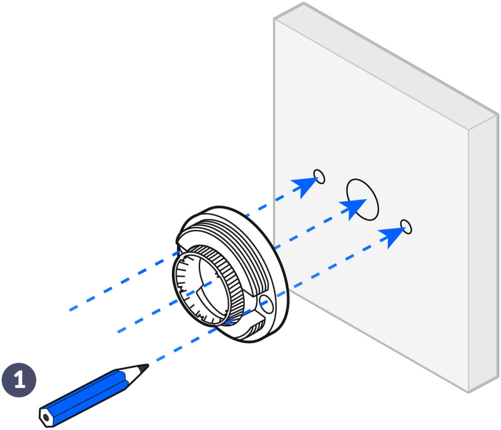

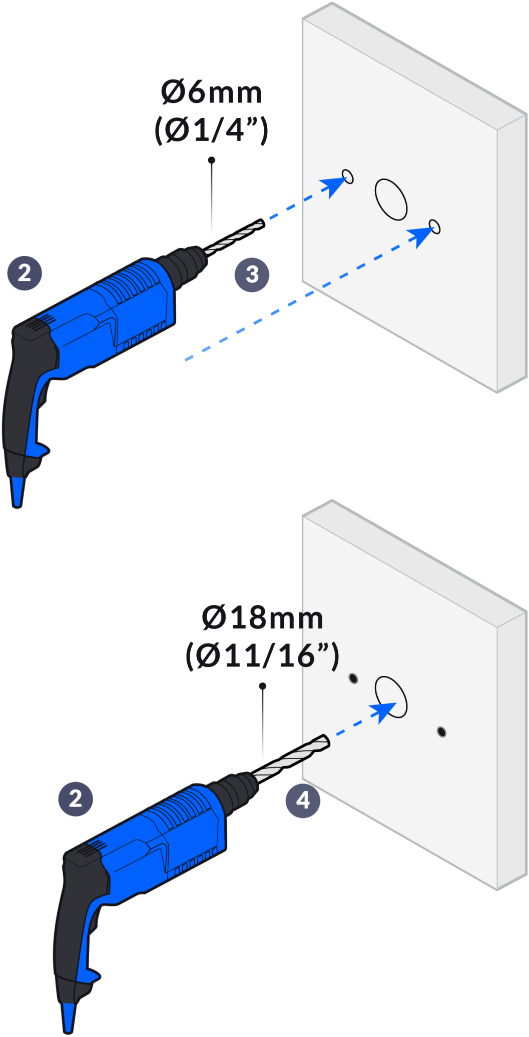
Ø6mm
(Ø1/4”)
2
3
Ø18mm
(Ø11/16”)
2
4

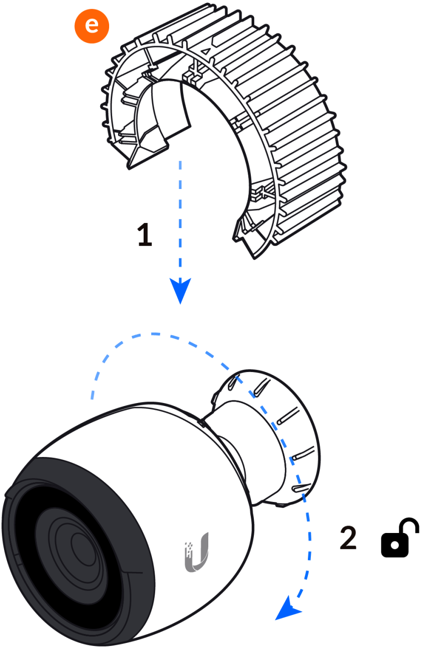

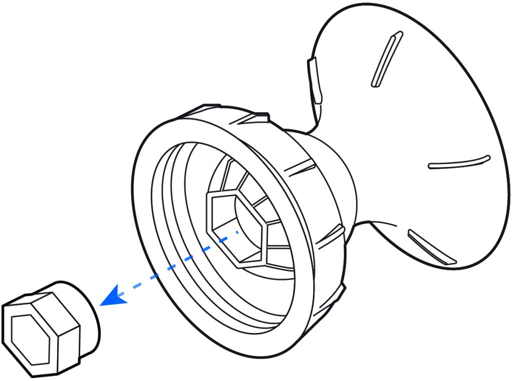

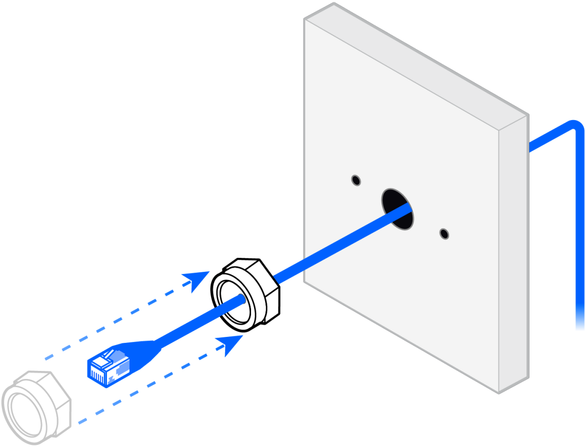

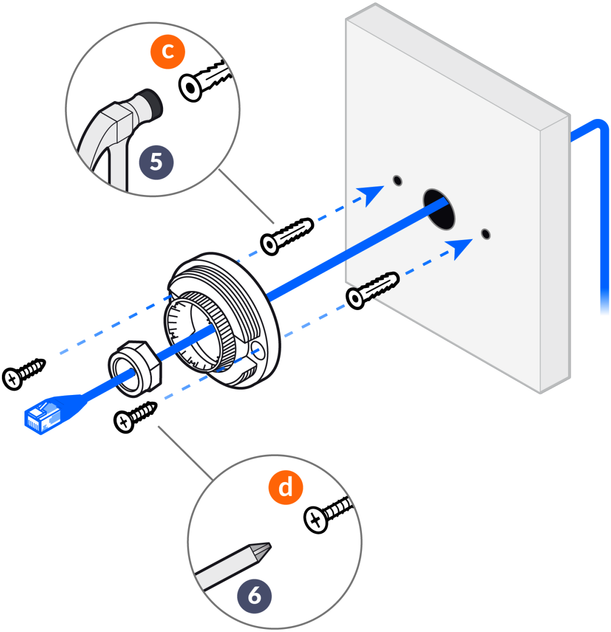

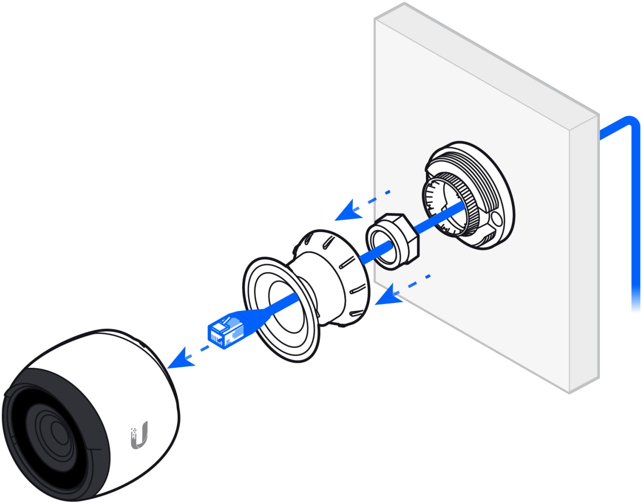

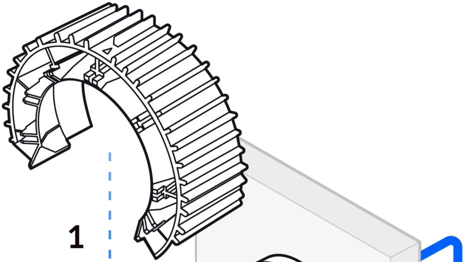

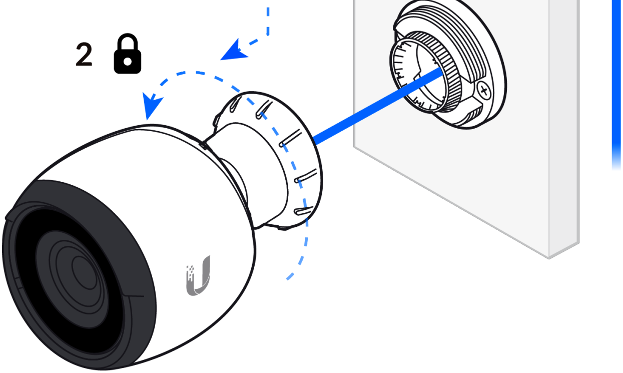

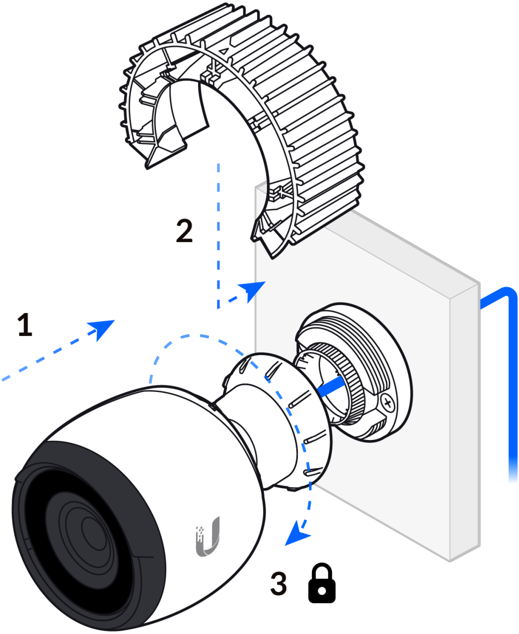

C

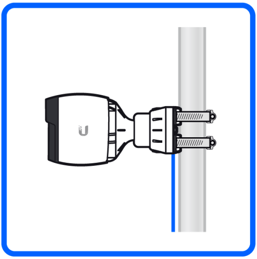

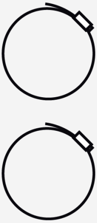

1

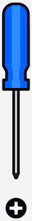

2

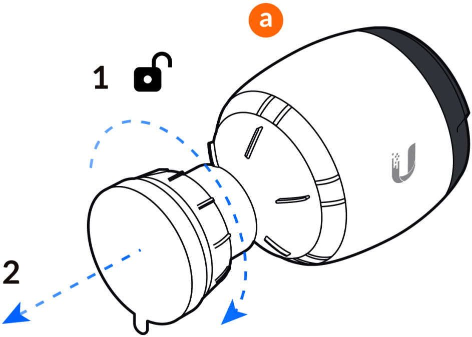

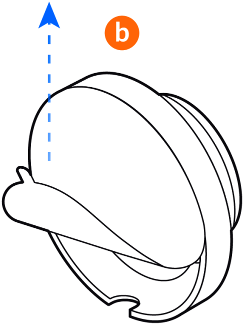

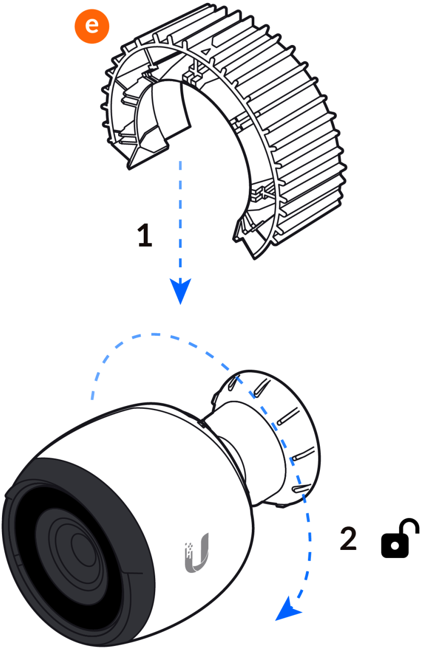

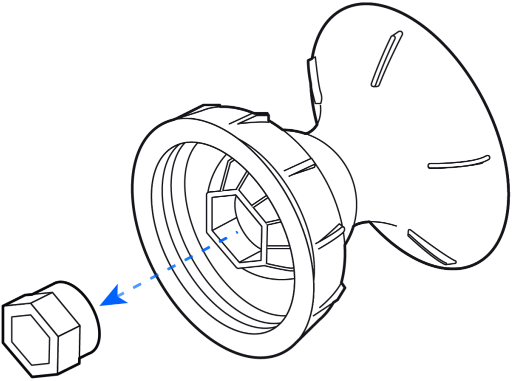

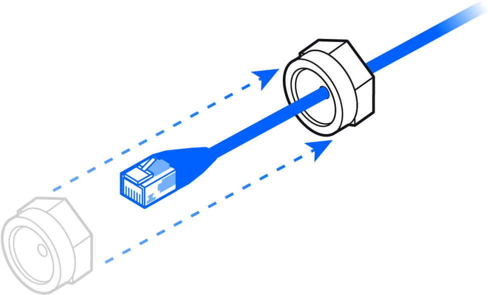

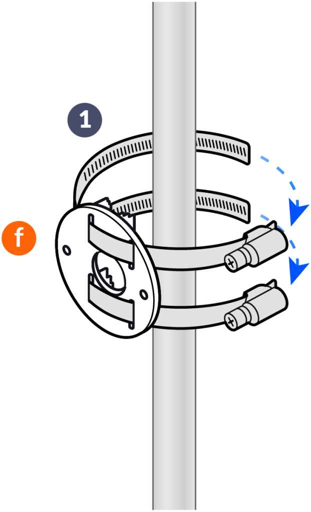

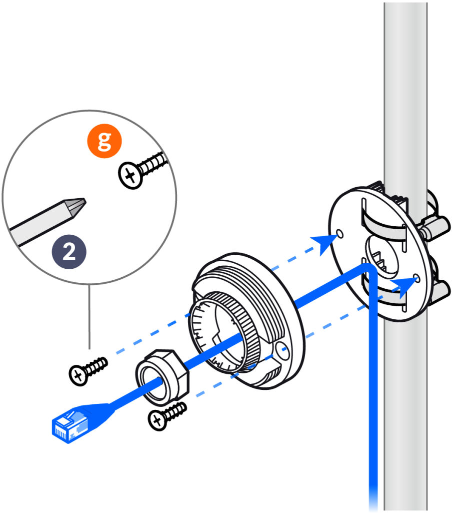

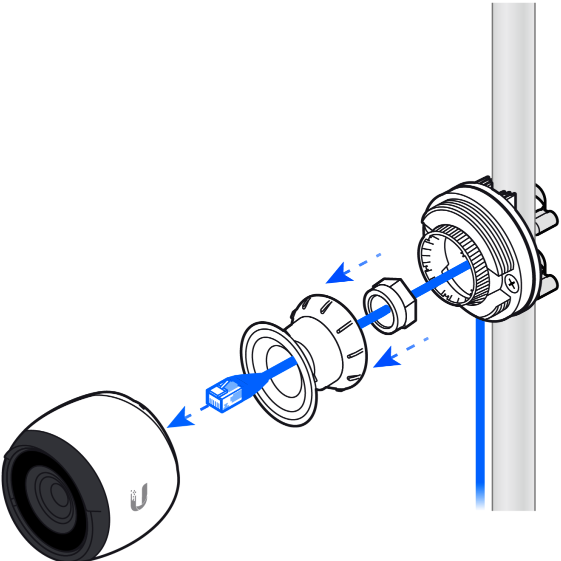

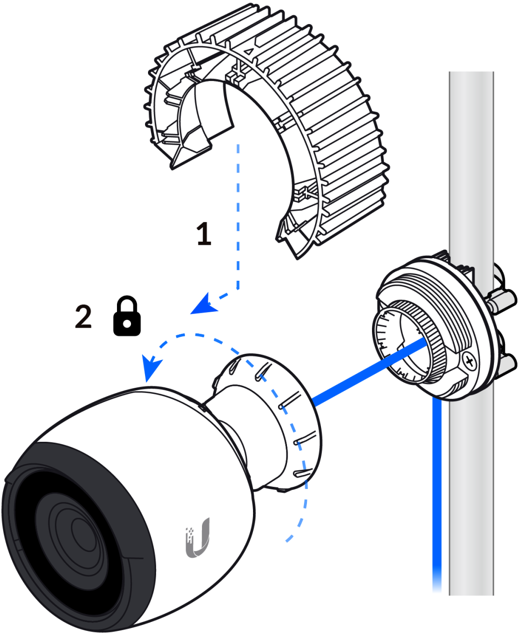

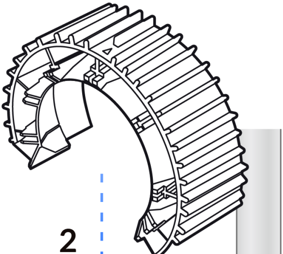

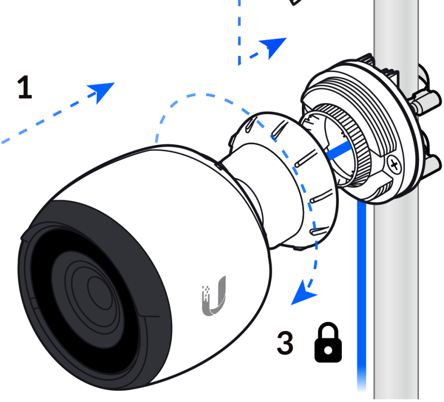

2

Internet

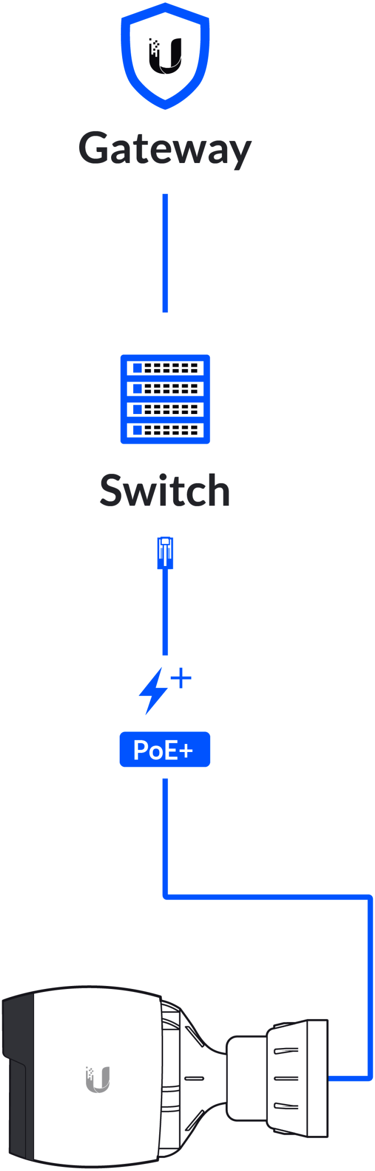
Gateway
Switch
PoE+

3

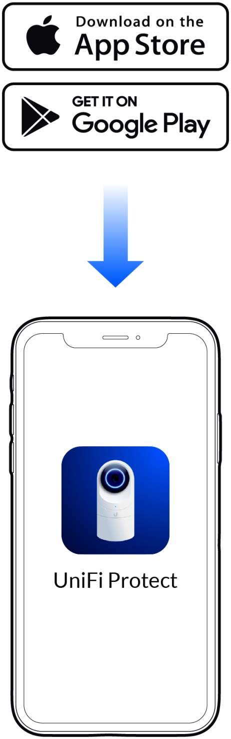
Download on the App Store
GET IT ON Google Play
UniFi Protect

4

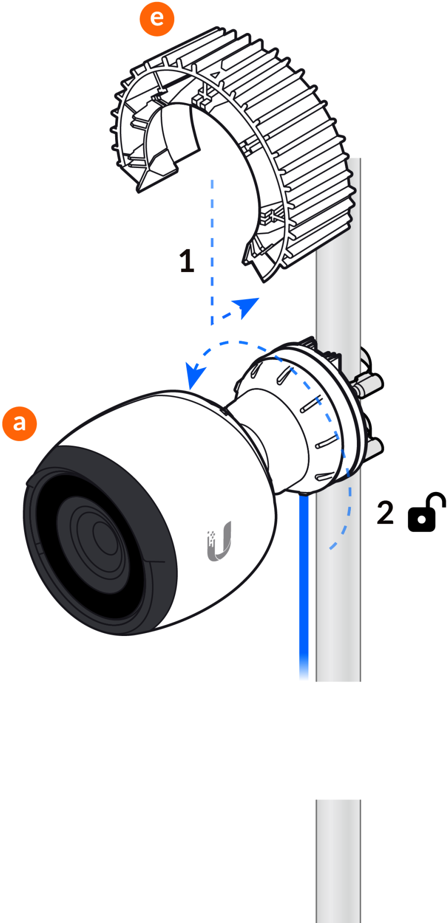

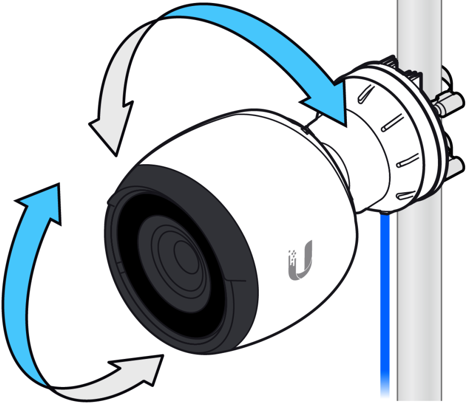

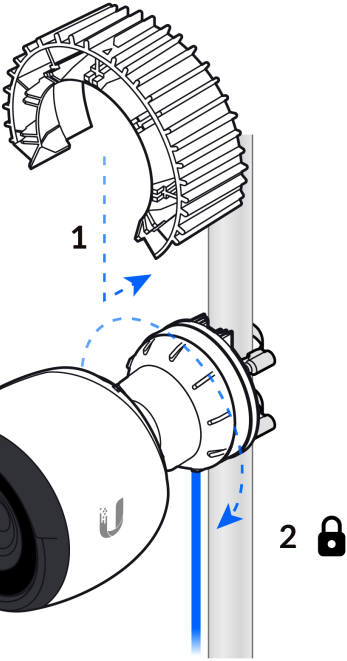

Get Answers
help.ui.com

UI Support

🔗

©2021 Ubiquiti Inc. All rights reserved. Ubiquiti, Ubiquiti Networks, the Ubiquiti U logo, UniFi, and UniFi Protect are trademarks or registered trademarks of Ubiquiti Inc. in the United States and in other countries. App Store and the Apple logo are trademarks of Apple Inc., registered in the U.S. and other countries. Google Play and the Google Play logo are trademarks of Google LLC. All other trademarks are the property of their respective owners.